Model No.KPT-1 SAND RAMMER

EXPLODED VIEW

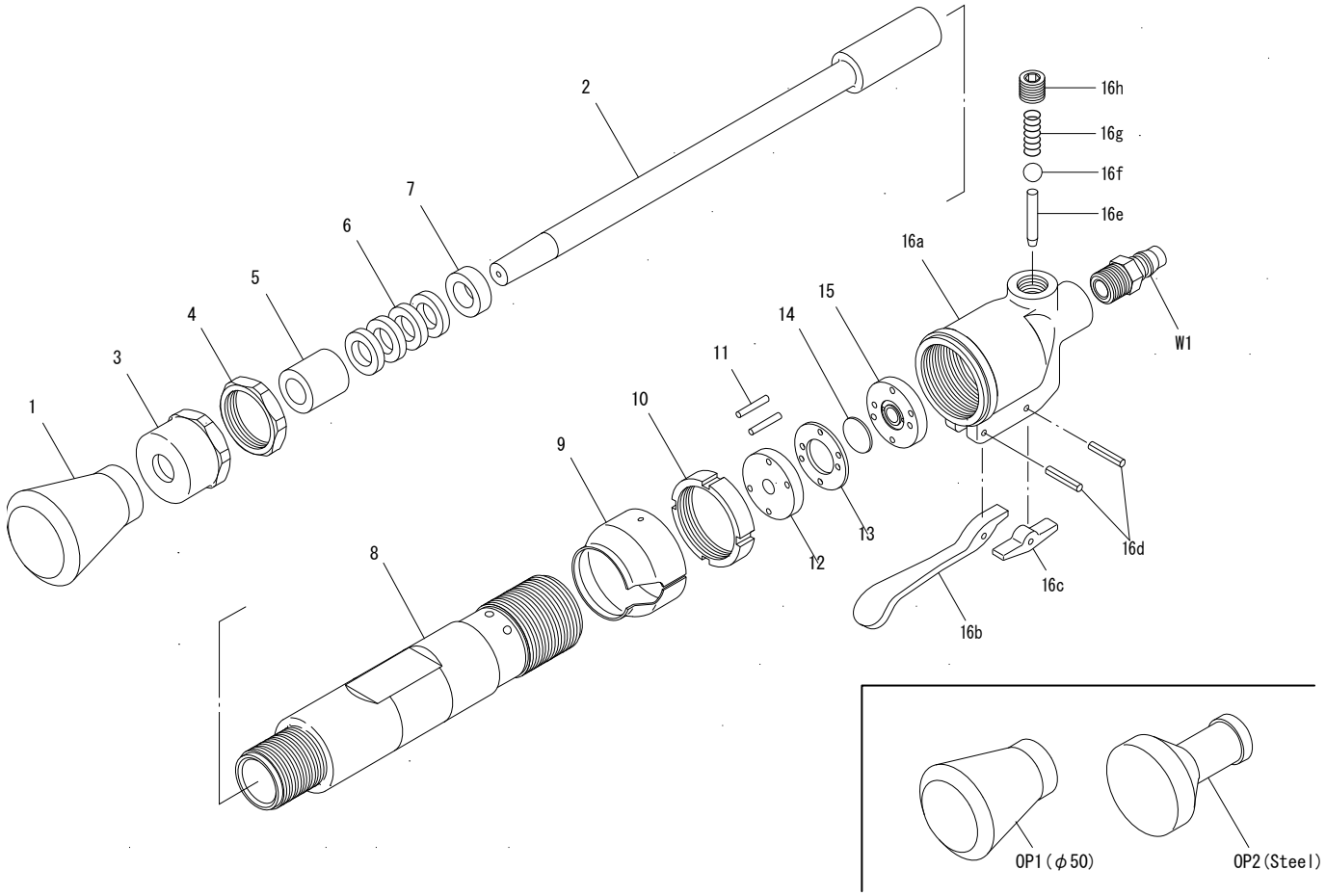

PARTS LIST

2015.4

◆Parts may be changed with or without notice for improvement.

PARTS No.	NAME OF PARTS	PER SET	PARTS CODE	ORDER
1	Rubber Butt φ40	1	5001	
2	Piston 230mm	1	5004	
3	Ground	1	5006	
4	Ground Nut	1	5007	
5	Piston Bush	1	5008	
6	Leather Packing 20*12.5*5	5	5009	
7	Packing Bush	1	5010	
8	Cylinder	1	5011	
9	Exhaust Cover	1	5012	
10	Lock Nut	1	5013	
11	Valve Pin 3*18.8	2	9512	
12	Lower Valve Sheet	1	5014	
13	Valve Case	1	4505	
14	Valve	1	2015	
15	Upper Valve Sheet	1	5015	
16	Handle Assy	1	C5016	
16a	Handle Body	1	5016	
16b	Lever (Long)	1	5017	
16c	Lever (Short)	1	5018	
16d	Lever Pin 4*22	2	9553	
16e	Throttle Pin	1	5020	
16f	Throttle Valve 3/8	1	9471	
16g	Throttle Spring 9*22	1	9202	

PARTS No.	NAME OF PARTS	PER SET	PARTS CODE	ORDER
16h	Throttle Plug 1/4	1	9480	
W1	Coupling PM23	1	9106	
OP1	Rubber Butt(Big) φ50	1	5002	
OP2	Steel Butt φ40	1	5003	
*OP3	Piston (Long) 270mm	1	5005	