Model No.KPT-2L SAND RAMMER

EXPLODED VIEW

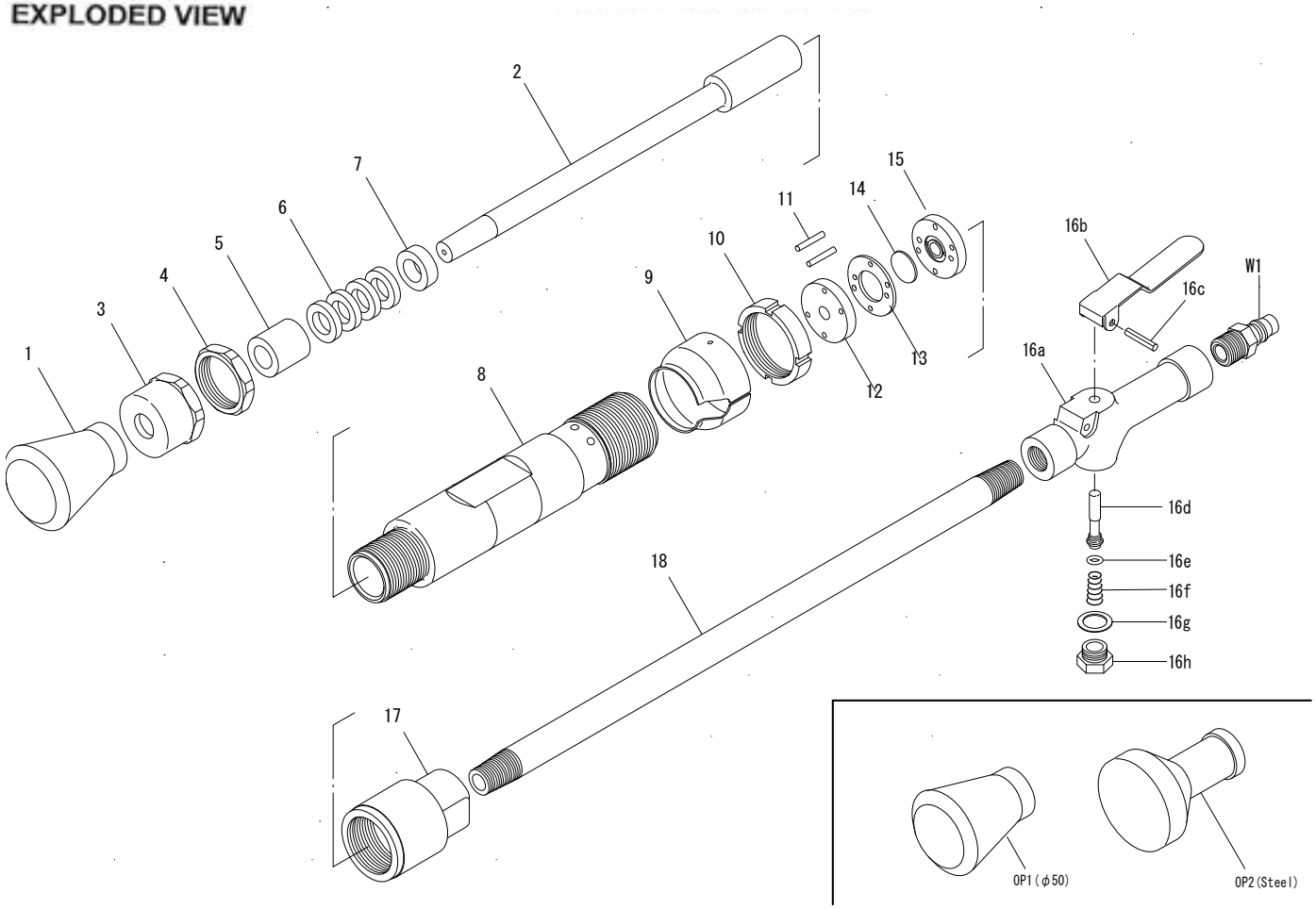

PARTS LIST

2015.4

◆Parts may be changed with or without notice for improvement.

PARTS No.	NAME OF PARTS	PER SET	PARTS CODE	ORDER
1	Rubber Butt φ52	1	5151	
2	Piston 260mm	1	5154	
3	Ground	1	5156	
4	Ground Nut	1	5157	
5	Piston Bush	1	5158	
6	Leather Packing 23.5*14*5	5	5159	
7	Packing Bush	1	5160	
8	Cylinder	1	5161	
9	Exhaust Cover	1	5162	
10	Lock Nut	1	5163	
11	Valve Pin 3*18.8	2	9512	
12	Lower Valve Sheet	1	5164	
13	Valve Case	1	5165	
14	Valve	1	2015	
15	Upper Valve Sheet	1	5166	
16	Handle Assy	1	C5050	
16a	Handle Body	1	5050	
16b	Lever	1	5051	
16c	Lever Pin 4*26	1	9555	
16d	Throttle Rod	1	5057	
16e	O-Ring P-4	1	9400	
16f	Throttle Spring	1	9230	
16g	Gasket 14*20*1	1	9736	

PARTS No.	NAME OF PARTS	PER SET	PARTS CODE	ORDER
16h	Throttle Cap	1	4106	
17	Cap	1	5170	
18	Pipe 3/8*420	1	5055	
W1	Coupling PM23	1	9106	
OP1	Rubber Butt(Big) φ60	1	5152	
OP2	Steel Butt φ49	1	5153	
*OP3	Piston (Long) 270mm	1	5155	