Model No.KPT-4 SAND RAMMER

EXPLODED VIEW

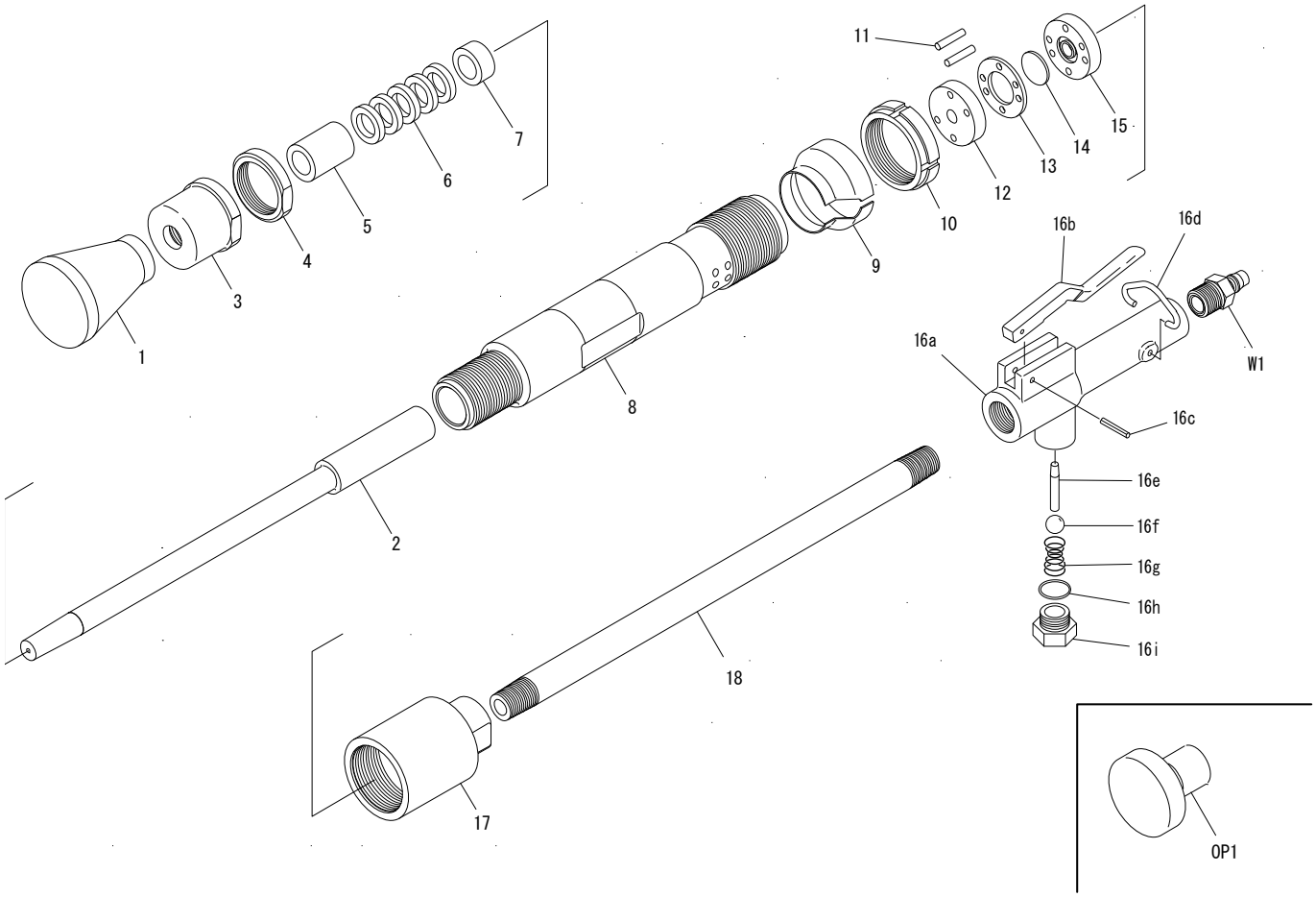

PARTS LIST

2015.4

◆Parts may be changed with or without notice for improvement.

PARTS No.	NAME OF PARTS	PER SET	PARTS CODE	ORDER
1	Rubber Butt φ65	1	5201	
2	Piston 385mm	1	5203	
3	Ground	1	5204	
4	Ground Nut	1	5205	
5	Piston Bush	1	5206	
6	Leather Packing 28*18*5	5	5207	
7	Packing Bush	1	5208	
8	Cylinder	1	5209	
9	Exhaust Cover	1	5210	
10	Lock Nut	1	5211	
11	Valve Pin 5*24.8	2	9520	
12	Lower Valve Sheet	1	5212	
13	Valve Case	1	5213	
14	Valve	1	5214	
15	Upper Valve Sheet	1	5215	
16	Handle Assy	1	C5216	
16a	Handle Body	1	5216	
16b	Lever	1	5217	
16c	Lever Pin 4*25	1	9554	
16d	Lever Stopper	1	5219	
16e	Throttle Pin	1	2010	
16f	Throttle Valve 1/2	1	9472	
16g	Throttle Spring	1	9234	

PARTS No.	NAME OF PARTS	PER SET	PARTS CODE	ORDER
16h	O-Ring S-15	1	9406	
16i	Throttle Cap	1	5224	
17	Cap	1	5225	
18	Pipe 1/2*420	1	5226	
19	Inlet Bush 3/4-1/2	1	5227	
W1	Coupling PM24	1	9107	
OP1	Steel Butt φ59	1	5202	